Company name:	ASC Water Tanks
Created by:	Anant Yuvarajah
Phone:	0414880162
Email:	anant@asctanks.com.au
Date:	15/06/2022

Qty.	Description
1	**UNILIFT KP.150.AV.1**

Note! Product picture may differ from actual product

Product No.: 011K4500
Submersible drainage pump

Vertical single-stage stainless steel submersible pump with vertical discharge port and integrated submersible 1-phase canned motor in insulation class F with thermal overload protection.

The pump is fitted with suction strainer and a carrying handle and is supplied with a 5 m mains cable and vertical level switch for automatic start and stop.

The impeller is a semi-open impeller for 10 mm free passage suitable for pumping groundwater, surface water, rain water and similar liquids.

The pump has a double shaft seal consisting of two lip seals with grease in-between.

The pump has an outer casing ensuring continuous cooling of the motor by the pumped liquid. The rotor shaft operates in two maintenance-free carbon bearings cooled by the pumped liquid

The motor is filled with a non-toxic motor liquid.

Liquid:	
Liquid temperature range:	0 .. 50 °C
Density:	998.2 kg/m³
Technical:	
Maximum flow:	142 l/min
Max. Particle:	10 mm
Approvals:	CE,RCM,LGABG,EAC,TUVRHWID
Materials:	
Pump housing:	Stainless steel EN 1.4301 AISI 304
Impeller:	Stainless steel EN 1.4301 AISI 304
Installation:	
Range of ambient temperature:	0 .. 50 °C

Company name: ASC Water Tanks
Created by: Anant Yuvarajah
Phone: 0414880162
Email: anant@asctanks.com.au
Date: 15/06/2022

Qty.	Description	
	Type of connection:	Rp
	Size of connection:	1 1/4 inch
	Maximum installation depth:	2 m
	Electrical data:	
	Power input - P1:	300 W
	Mains frequency:	50 Hz
	Rated voltage [V]:	1 x 230-240 V
	Rated current:	1.3 A
	Capacitor size - run:	8 µF/400 V
	Enclosure class (IEC 34-5):	IP68
	Insulation class (IEC 85):	F
	Length of power cable:	5 m
	Type of cable plug:	AU
	Others:	
	Environmental approvals:	WEEE
	Net weight:	6.6 kg
	Gross weight:	7 kg
	Shipping volume:	0.013 m³
	Country of origin:	DK
	Custom tariff no.:	8413709019182742

Company name: ASC Water Tanks
Created by: Anant Yuvarajah
Phone: 0414880162
Email: anant@asctanks.com.au
Date: 15/06/2022

011K4500 UNILIFT KP.150.AV.1 50 Hz

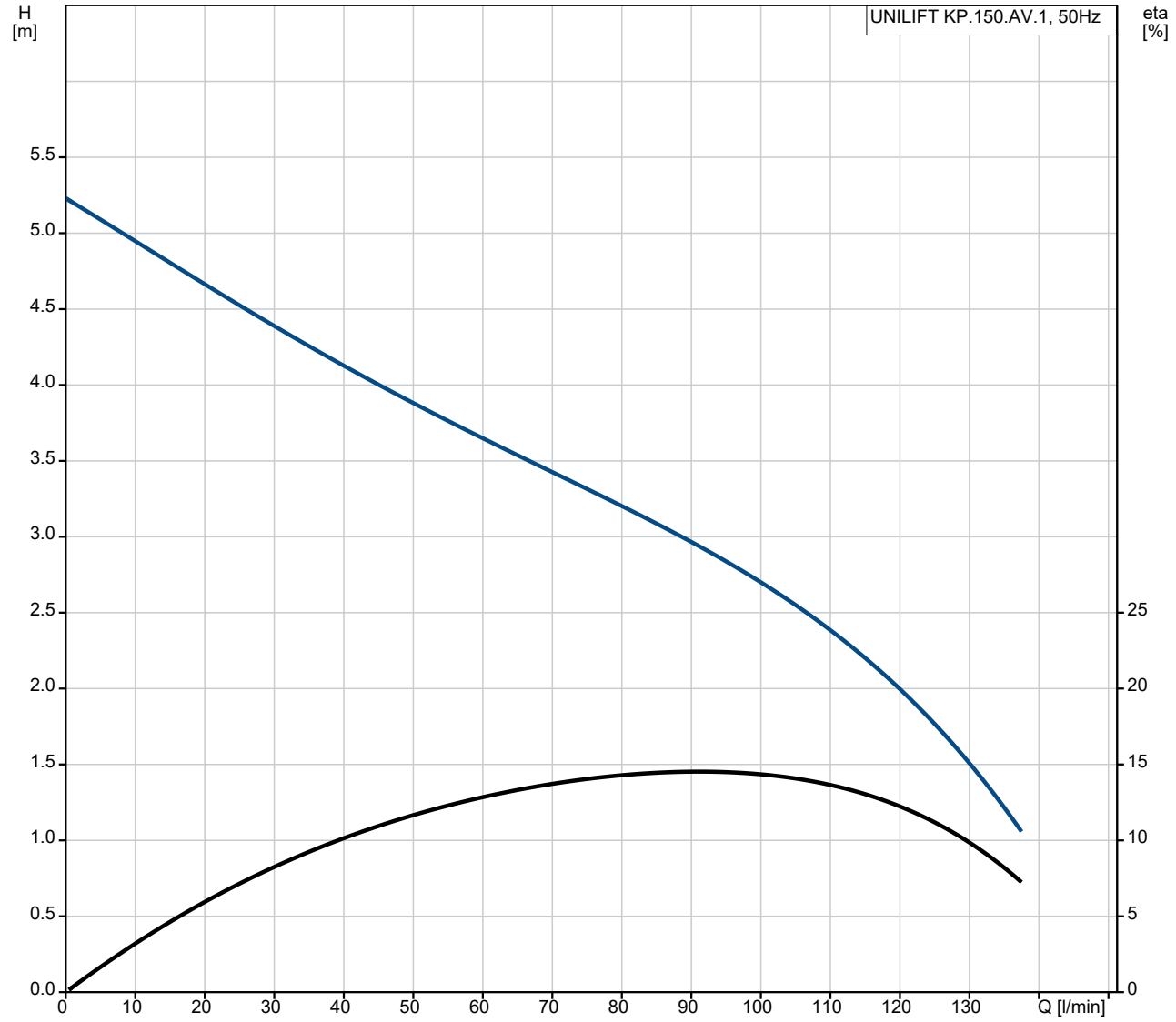

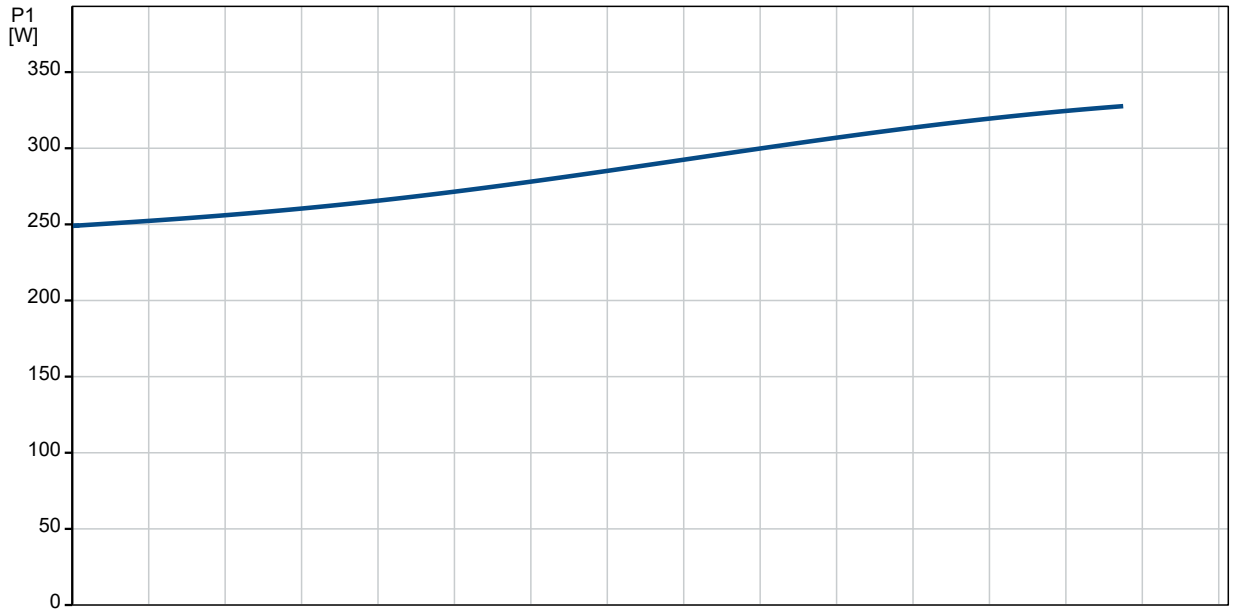

Company name: ASC Water Tanks
Created by: Anant Yuvarajah
Phone: 0414880162
Email: anant@asctanks.com.au
Date: 15/06/2022

Description	Value
General information:	
Product name:	UNILIFT KP.150.AV.1
Product No:	011K4500
EAN number:	5700391247804
Price:	
Technical:	
Maximum flow:	142 l/min
Maximum head:	5.5 m
Max. Particle:	10 mm
Approvals:	CE,RCM,LGABG,EAC,TUVRHWI D
Model:	A
Materials:	
Pump housing:	Stainless steel
Pump housing:	EN 1.4301
Pump housing:	AISI 304
Impeller:	Stainless steel
Impeller:	EN 1.4301
Impeller:	AISI 304
Installation:	
Range of ambient temperature:	0 .. 50 °C
Type of connection:	Rp
Size of connection:	1 1/4 inch
Maximum installation depth:	2 m
Liquid:	
Liquid temperature range:	0 .. 50 °C
Density:	998.2 kg/m³
Electrical data:	
Power input - P1:	300 W
Mains frequency:	50 Hz
Rated voltage [V]:	1 x 230-240 V
Rated current:	1.3 A
Capacitor size - run:	8 µF/400 V
Enclosure class (IEC 34-5):	IP68
Insulation class (IEC 85):	F
Built-in motor protection:	CONTACT
Thermal protec:	internal
Length of power cable:	5 m
Type of cable plug:	AU
Controls:	
Level switch:	vertical level switch
Others:	
Environmental approvals:	WEEE
Net weight:	6.6 kg
Gross weight:	7 kg
Shipping volume:	0.013 m³
Country of origin:	DK
Custom tariff no.:	8413709019182742

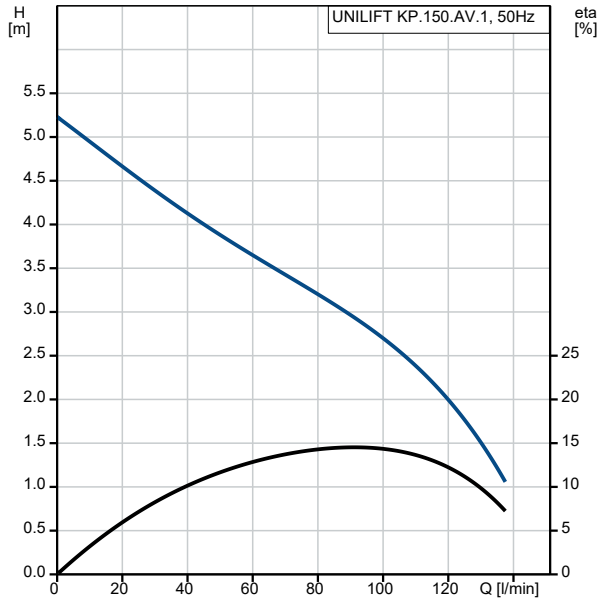

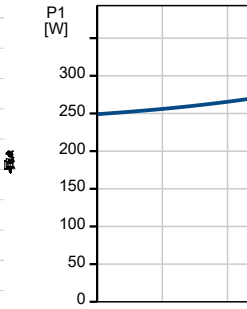

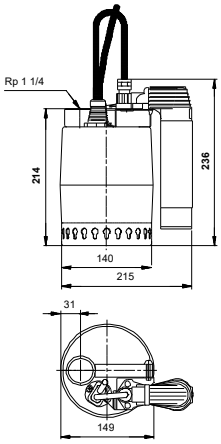

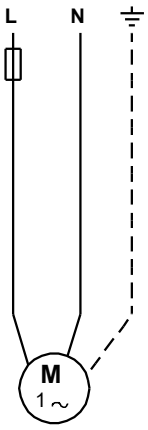

Company name: ASC Water Tanks
Created by: Anant Yuvarajah
Phone: 0414880162
Email: anant@asctanks.com.au
Date: 15/06/2022

011K4500 UNILIFT KP.150.AV.1 50 Hz

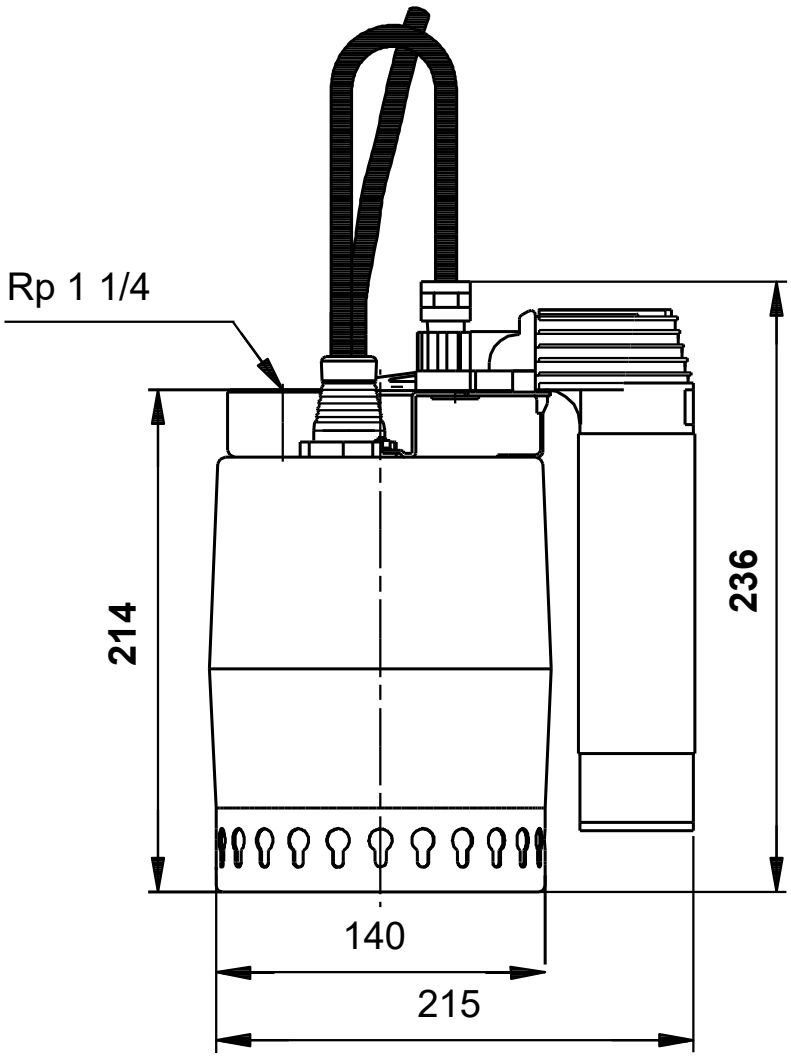

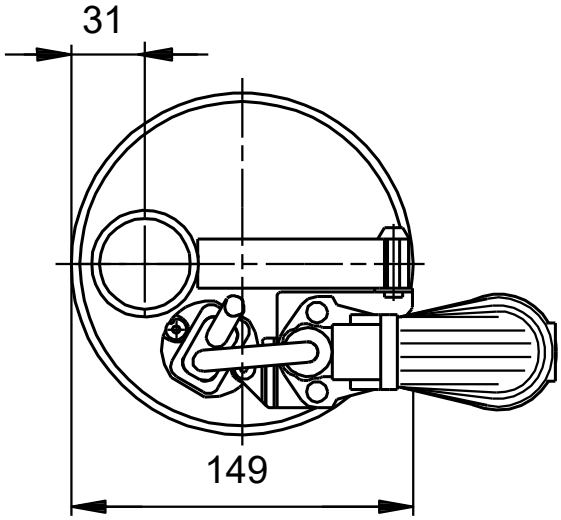

Note! All units are in [mm] unless others are stated.
Disclaimer: This simplified dimensional drawing does not show all details.

Company name: ASC Water Tanks
Created by: Anant Yuvarajah
Phone: 0414880162
Email: anant@asctanks.com.au
Date: 15/06/2022

Spare parts UNILIFT KP.150.AV.1, Product No. 011K4500
Produced After 1623 (production year and week number)

	Pos	Description	Annotation	Classification Data	Part no.	Qty.	Unit
-		Kit, Cable w/level switch			00016714	1	pcs
-		Parts				1	
	26a	Washer		Designation: DIN 6798 A			
				Internal diameter: 4,3			
				Outer diameter: 8			
				Thickness: 0,5			
	26	Nut					
	32	Mounting bracket					
	33	Cross recess Pan head screw					
	34	Socket button head screw		Designation: ISO 7380			
+	181	Cable				1	
-		Kit, Impeller			00015778	1	pcs
	37	Sealing part				1	
+	49	Impeller cpl.				1	
	67	Nut				1	
	149	Non-return valve			00015211	1	pcs
	26	Nut			96537523	2	pcs
	32	Mounting bracket			96548065	1	pcs
	37	Sealing part			96537525	1	pcs
+	49	Impeller cpl.			96537521	1	pcs
	50	Pump housing cpl.			96548067	1	pcs
	84	Strainer			96548064	1	pcs
	149	Valve flap		Designation: RUBBER	96578978	1	pcs
+	172	Shaft w/rotor cpl.			96545200	1	pcs
+	188	Bearing cpl.			96551553	1	pcs
	189	Lower handle			96545191	1	pcs